SemTron Microtech Corporation

SMC2354SN

Single N-Channel MOSFET

■DESCRIPTION

SMC2354SN is the N-Channel MOSFET , this advanced trench technology to provide excellent $R_{DS(ON)}$. This devices are well suited for high efficiency fast switching applications, low in-line power loss are needed in small outline surface mount package.

■PART NUMBER INFORMATION

SMC 2354 SN - TR G
a b c d e

a : Company name.
b : Product Serial number.
c : Package code SN: SOT-23
d : Handling code TR: Tape&Reel
e : Green produce code G: *RoHS Compliant*

■FEATURES

V_{DS}=20V, I_D=5.7A

$R_{DS(ON)}$=22mΩ(Typ.)@V_{GS}=4.5V
$R_{DS(ON)}$=25mΩ(Typ.)@V_{GS}=2.5V
$R_{DS(ON)}$=30mΩ(Typ.)@V_{GS}=1.8V

◆Fast switch
◆1.8V Low gate drive applications
◆High power and current handlingcapability

■APPLICATIONS

◆Hend-Held Instruments
◆Load Switch

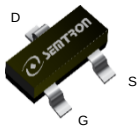

SOT-23

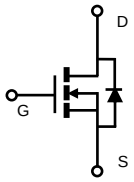

■ABSOLUTE MAXIMUM RATINGS (T_A = 25°C Unless otherwise noted)

Symbol	Parameter		Rating	Units
V_{DSS}	Drain-Source Voltage		20	V
V_{GSS}	Gate-Source Voltage		±12	V
I_D	Continuous Drain Current	T_A=25°C	5.7	A
		T_A=70°C	4.6	A
I_{DM}	Pulsed Drain Current [B]		22	A
P_D	Power Dissipation [A]	T_A=25°C	1.3	W
		T_A=70°C	0.8	W
T_J	Operation Junction Temperature		-55/150	°C
T_{STG}	Storage Temperature Range		-55/150	°C

■THERMAL RESISTANCE

Symbol	Parameter		Typ	Max	Units
$R_{\theta JA}$	Thermal Resistance Junction to Ambient [A]	t≦10s		95	°C/W
	Thermal Resistance Junction to Ambient [AC]	Steady-State		130	

Copyright © Semtron Microtech Corp.

■ELECTRICAL CHARACTERISTICS(T_A = 25°C Unless otherwise noted)

Symbol	Parameter	Condition	Min	Typ	Max	Unit
Static Parameters						
BV_{DSS}	Drain-Source Breakdown Voltage	V_{GS}=0V, I_D=250μA	20			V
$V_{GS(th)}$	Gate Threshold Voltage	V_{DS}=V_{GS}, I_D=250μA	0.4	0.7	1	V
I_{GSS}	Gate Leakage Current	V_{DS}=0V, V_{GS}=±12V			±100	nA
I_{DSS}	Zero Gate Voltage Drain Current	V_{DS}=20V, V_{GS}=0V, T_J=25°C			1	μA
		V_{DS}=16V, V_{GS}=0V, T_J=75°C			10	
$R_{DS(ON)}$	Drain-source On-Resistance [D]	V_{GS}=4.5V, I_D=5.7A V_{GS}=2.5V, I_D=3A V_{GS}=1.8V, I_D=2A		22 25 30	26 29 38	mΩ
G_{fs}	Forward Transconductance	V_{DS}=5V, I_D=5A		7		S
Diode Characteristics						
V_{SD}	Diode Forward Voltage [D]	I_S=1A, V_{GS}=0V			1	V
I_S	Diode Continuous Forward Current				2.9	A
t_{rr}	Reverse Recovery Time	I_S=5A, dI/dt=100A/μs		8.5		ns
Q_{rr}	Reverse Recovery Charge			2.7		nC
Dynamic and Switching Parameters [E]						
Q_g	Total Gate Charge	V_{DS}=10V, V_{GS}=4.5V, I_D=5A		8.4	11.8	nC
Q_{gs}	Gate-Source Charge			1	1.4	
Q_{gd}	Gate-Drain Charge			2.8	3.9	
C_{iss}	Input Capacitance	V_{DS}=10V, V_{GS}=0V, f=1MHz		492		pF
C_{oss}	Output Capacitance			82		
C_{rss}	Reverse Transfer Capacitance			70		
R_g	Gate Resistance	V_{GS}=0V, V_{DS}=0V, F=1MHz		1.6		Ω
$t_{d(on)}$	Turn-On Time	V_{DD}=10V, V_{GEN}=4.5V R_G=3.3Ω, I_D=1A		4.7	9	nS
t_r				14	27	
$t_{d(off)}$	Turn-Off Time			23.6	45	
t_f				8.5	16	

Note: Absolute maximum ratings are those values beyond which the device could be permanently damaged.

A. Surface mounted on FR4 board using 1 in^2 pad size.
B. Pulsed width limited by maximum junction temperature, $T_{J(MAX)}$=150°C.
C. Using ≤ 10s junction-to-ambient thermal resistance is base on $T_{J(MAX)}$=150°C.
D. Pulse test width ≤300μs and duty cycle ≤ 2%.
E. Guaranteed by design, not subject to production testing.

The products and product specifications contained herein are subject to change without notice to improve performance characteristics. Consult us, or our representatives before use, to confirm that the information in this datasheet is up to date We assume no responsibility for any infringement of patents, patent rights, or other rights arising from the use of any information and circuitry in this datasheet.

Copyright © Semtron Microtech Corp.

TYPICAL CHARACTERISTICS

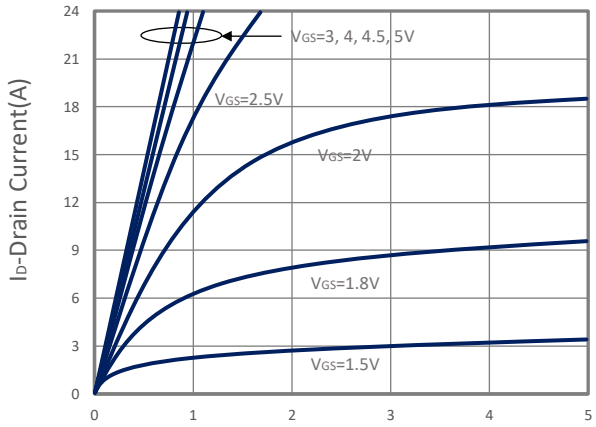

Output Characteristics

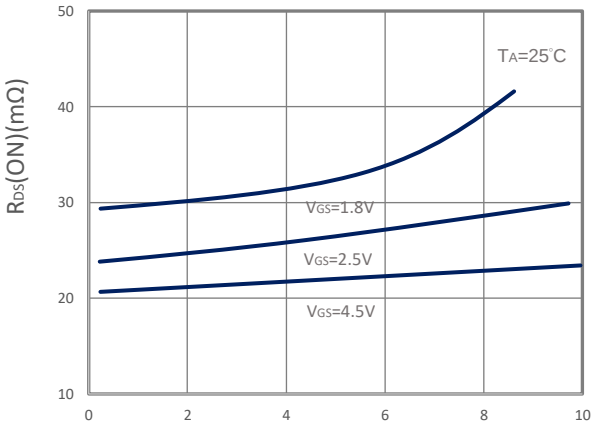

Drain-Source On Resistance

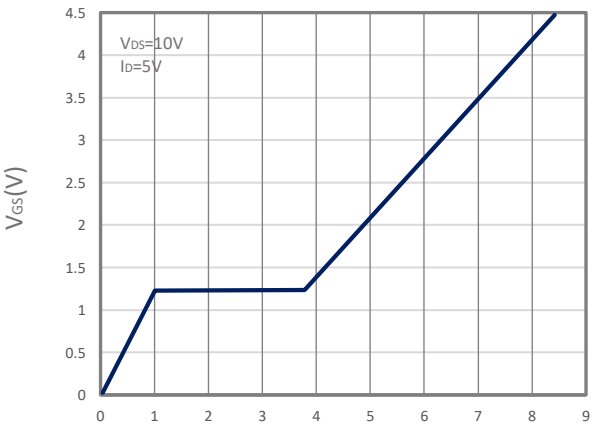

Gate Charge

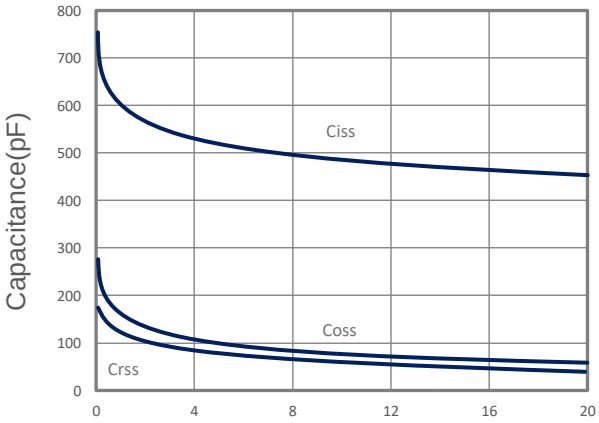

Capacitance

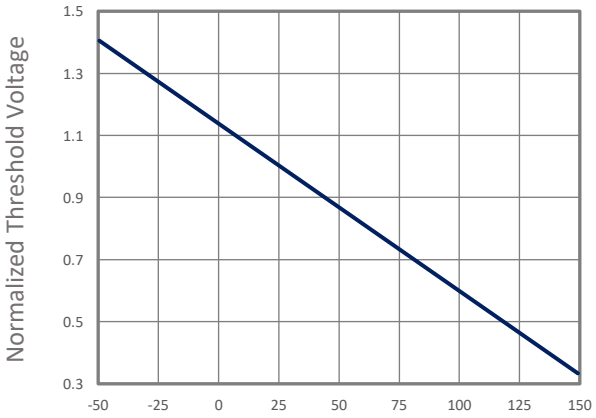

Gate Threshold Voltage

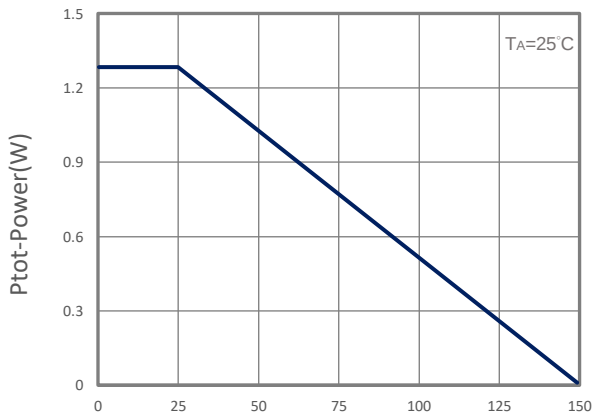

Power Dissipation

Copyright © Semtron Microtech Corp.

TYPICAL CHARACTERISTICS

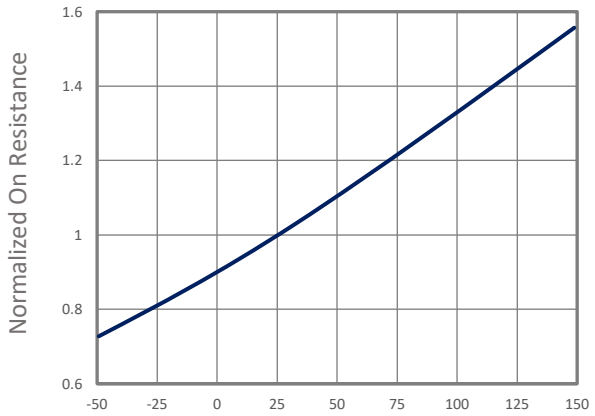

RDS(ON) vs Junction Temperature

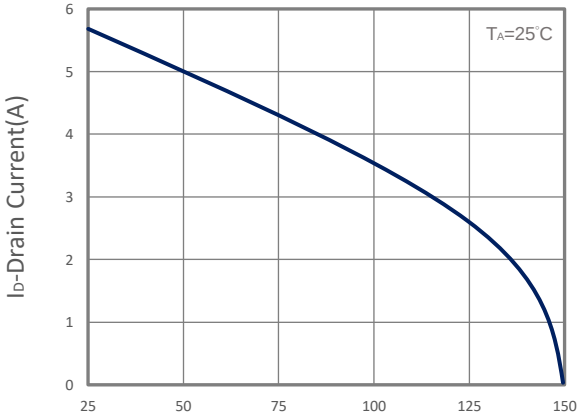

Drain Current vs TJ

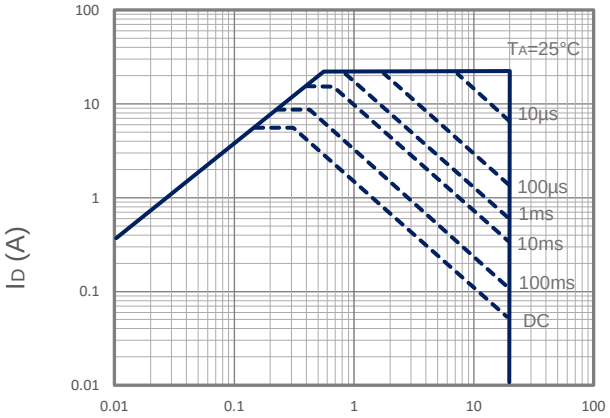

Maximum Safe Operation Area

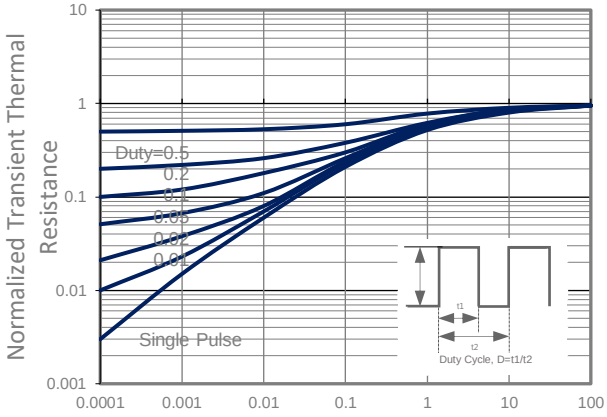

Thermal Transient Impedance

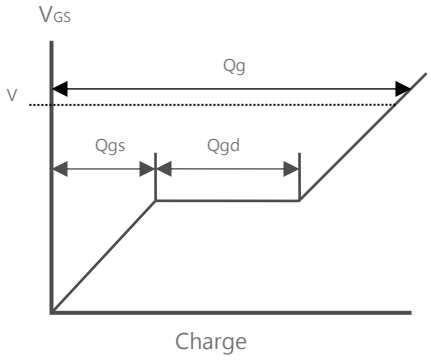

Gate Chrge Waveform

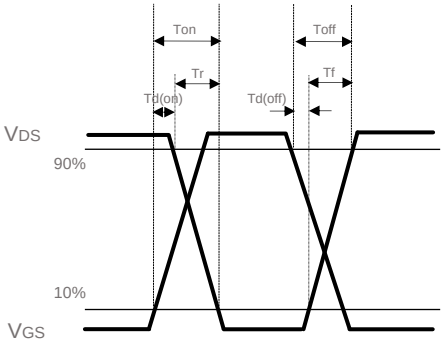

Switching Time Waveform

Copyright © Semtron Microtech Corp.

■SOT-23 PACKAGE DIMENSIONS

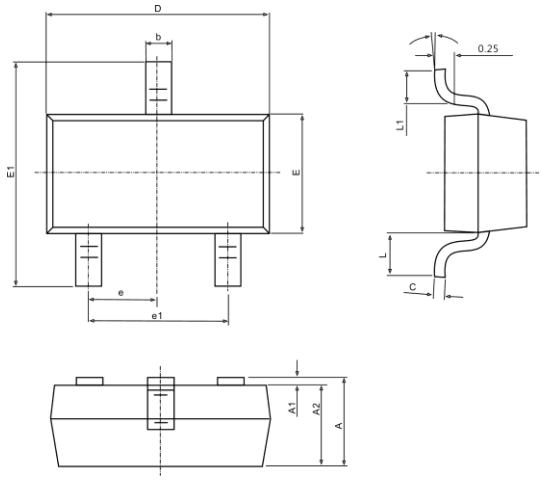

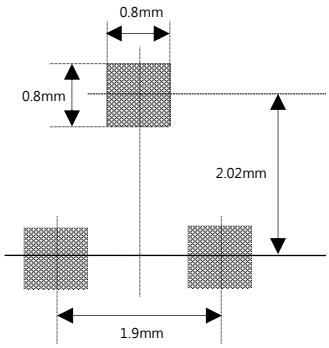

Recommended Land Pattern

Symbol	Dimensions In Millimeters		Dimensions In Inches	
	Min.	Max.	Min.	Max.
A	0.900	1.150	0.035	0.045
A1	0.000	0.100	0.000	0.004
A2	0.900	1.050	0.035	0.041
b	0.300	0.500	0.012	0.020
c	0.080	0.150	0.003	0.006
D	2.800	3.000	0.110	0.118
E	1.200	1.400	0.047	0.055
E1	2.250	2.550	0.089	0.100
e	0.950 TYP.		0.037 TYP	
e1	1.800	2.000	0.071	0.079
L	0.550 REF.		0.022 REF.	
L1	0.300	0.500	0.012	0.020
θ	0°	8°	0°	8°

Copyright © Semtron Microtech Corp.